# High Precision, 18-bit Pseudo Differential 400 kSPS SAR ADC

## Features

- 18-bit pseudo differential, no missing code
- Throughput: 400 kSPS
- INL: ±2.5 LSB
- DNL: -0.9/+1.5 LSB
- SINAD: 94.2 dB at 1 kHz
- THD: -105 dB at 1 kHz
- Differential Analog Input Range: $\pm V_{REF}$
- No Pipeline Delay
- Single Supply: 5 V
- 1.8 V/2.5 V/3 V/5 V Logic Interface
- Packages: MSOP-10/DFN-10
- Standby Current: 2 nA
- Operating Temperature Range: -40 °C to +85 °C

## Applications

- Precision Data Acquisition
- Automated Testing
- Precision Instrument
- Medical Instrument

## General Description

ZJC2004 is low noise, low power consumption, 18-bit pseudo differential input SAR ADC with throughput up to 400 kSPS. The part is available in small package and easy to use. It can reduce the power consumption and complexity of the system, thus achieve high density designs.

ZJC2004 requires 2.7 V to 5 V of power supply to sample the analog input voltage between IN+ and IN- ranging from 0 V to $+V_{REF}$ ($V_{REF}$: 0.5 V to $V_{DD}$). The reference voltage of ZJC2004 is provided externally, and can be set up to the supply voltage. Utilizing the independent VIO pin, ZJC2004 can be compatible with 1.8 V, 2.5 V, 3.3 V and 5 V logic interface. The part provides one SPI-compatible serial port and also supports daisy-chain operation for serial cascading of multiple devices.

ZJC2004 is available in 10-lead MSOP and DFN packages. The operating temperature is -40 °C to +85 °C. ZJC2004 series is pin compatible with industry standard parts.

## Typical Application

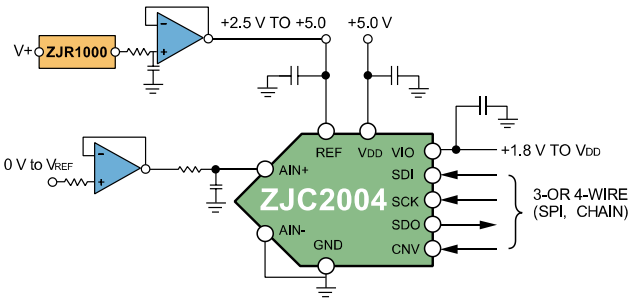


Figure 1. Application Examples

## Typical Characteristics

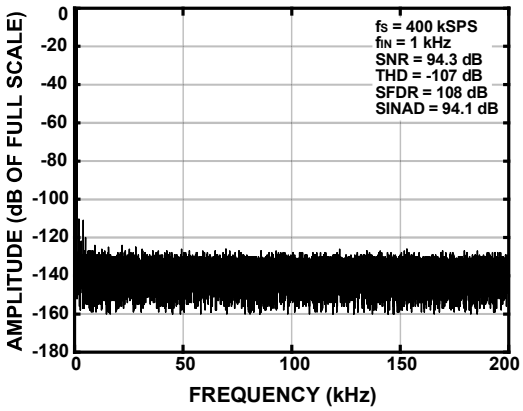


Figure 2. AC Characteristics

18/16/14-bit full speed SAR ADC ZJC2000 series is listed below:

| Model | 400 kSPS | 500 kSPS | 600 kSPS | Packages |
|---|---|---|---|---|
| 18-bit fully differential | ZJC2000 | | | MSOP-10<br>DFN-10 |
| 18-bit unipolar pseudo differential | ZJC2004 | | | |
| 18-bit bipolar pseudo differential | ZJC2005 | | | |
| 16-bit fully differential | | ZJC2001 | | |
| 16-bit unipolar pseudo differential | | ZJC2002 | | |
| 16-bit bipolar pseudo differential | | ZJC2003 | | |
| 14-bit unipolar pseudo differential | | | ZJC2007 | |
| 14-bit bipolar pseudo differential | | | ZJC2008 | |

18/16/14-bit regular speed SAR ADC series are as follows:

| Model | 200 kSPS | 250 kSPS | 300 kSPS | Packages |
|---|---|---|---|---|
| 18-bit fully differential | ZJC2010 | | | MSOP-10<br>DFN-10 |
| 18-bit unipolar pseudo differential | ZJC2014 | | | |
| 18-bit bipolar pseudo differential | ZJC2015 | | | |
| 16-bit fully differential | | ZJC2011 | | |
| 16-bit unipolar pseudo differential | | ZJC2012 | | |
| 16-bit bipolar pseudo differential | | ZJC2013 | | |
| 14-bit unipolar pseudo differential | | | ZJC2017 | |
| 14-bit bipolar pseudo differential | | | ZJC2018 | |


ZJW Microelectronics Ltd. All rights reserved

## Table of Contents


Features ..... 1
Applications ..... 1
General Description ..... 1
Typical Application ..... 1
Typical Characteristics ..... 1
Table of Contents ..... 3
Version (Release C) ..... 4
Revision History ..... 4
Pin Configurations and Function Descriptions ..... 5
Absolute Maximum Ratings ..... 6
Thermal Resistance ..... 6
Specifications ..... 7
Timing Specifications ..... 9
Typical Performance Characteristics ..... 11
Theory of Operation ..... 14
Circuit Structure ..... 14
Converter Operations ..... 14
Transfer Function ..... 15
Typical Connection Diagram ..... 16
Fully Differential to Single-ended Driver ..... 17
Reference Voltage Input ..... 18
Power Supply ..... 18
Digital Interface ..... 19
$\overline{CS}$ Mode (3-Wire without Busy Indication) ..... 20
$\overline{CS}$ Mode (3-Wire with Busy Indication) ..... 20
$\overline{CS}$ Mode (4-wire without Busy Indication) ..... 21
$\overline{CS}$ Mode (4-Wire with Busy Indication) ..... 22
Chain Mode (without Busy Indication) ..... 23
Chain Mode (with Busy Indication) ..... 24
Layout Guidelines ..... 25
Outline Dimensions ..... 26
Ordering Guide ..... 27
Product Order Model ..... 27
Related Parts ..... 28



ZJW Microelectronics Ltd. All rights reserved

## Version (Release C) [1]

### Revision History

**Feb. 2025 - Release C**

Updated Outline Dimensions, Ordering Guide, Product Order Model, Related Parts

**Dec. 2023**

English version

Updated a few pictures and parameters

**Aug. 2023 - Release B**

Updated Format

**Nov. 2022 - Release A**

[1] Information furnished by ZJW Microelectronics is believed to be accurate and reliable. However, no responsibility is assumed by ZJW Microelectronics for its use, nor for any infringements of patents or other rights of third parties that may result from its use. Specifications subject to change without notice. No license is granted by implication or otherwise under any patent or patent rights of ZJW Microelectronics. Trademarks and registered trademarks are the property of their respective owners.


ZJW Microelectronics Ltd. All rights reserved

## Pin Configurations and Function Descriptions

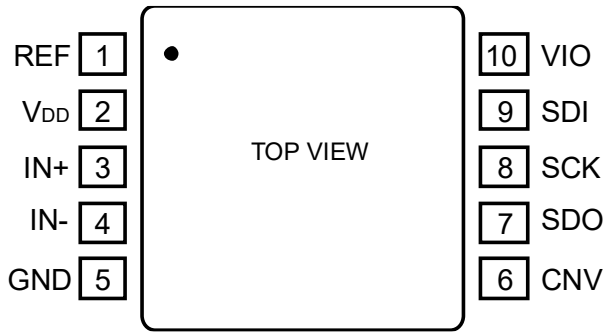


Figure 3. 10-lead MSOP pin configuration

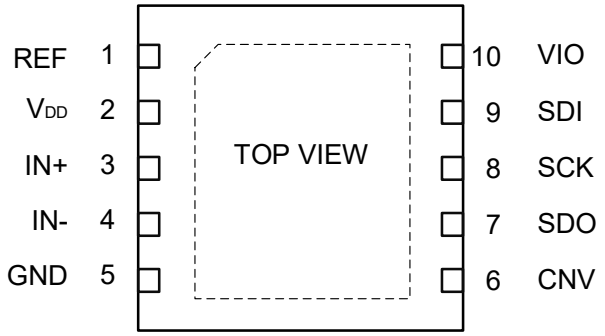


Figure 4. 10-lead DFN pin configuration

Note: The exposed pad has no internal connection. Connect the pad to GND.

| Mnemonic | Pin No. | Pin Type | Description |
|---|---|---|---|
| REF | 1 | Power Supply | The voltage reference input. $V_{REF}$ ranges from 0.5 V to $V_{DD}$. It is recommended that this pin must be decoupled to the GND by a 22 µF X7R ceramic capacitor as close as possible. |
| $V_{DD}$ | 2 | Power Supply | Power Supply pin. $V_{DD}$ ranges from 4.75 V to 5.25 V. It is recommended that $V_{DD}$ be bypassed through a minimum of 0.1 µF ceramic capacitor to GND. |
| IN+ | 3 | Analog Input | Analog input positive pin. IN+ and GND ranges from 0 V to $V_{REF}$. IN+ and IN- form a differential input with an input range of 0 V to $\pm V_{REF}$. |
| IN- | 4 | Analog Input | Analog input negative pin. IN- and GND ranges from 0 V to $V_{REF}$. |
| GND | 5 | Ground | Power Ground. |
| CNV | 6 | Digital Input | Conversion input. This input has multiple functions as described in the Digital Interface section. |
| SDO | 7 | Digital Output | Serial data output. The conversion result is output through this pin. It is synchronized with SCK. |
| SCK | 8 | Digital Input | Serial data clock input. When the device is selected, the conversion result is shifted out through this clock. |
| SDI | 9 | Digital Input | Serial data input. This input provides multiple functions to implement a variety of different serial protocols |
| VIO | 10 | Power Supply | Input/output interface digital power supply. The nominal voltage on this pin is the same as the controller interface power supply (1.8 V, 2.5 V, 3.3 V, or 5 V). It is recommended that VIO be bypassed through a minimum of 0.1 µF ceramic capacitor to GND. |
| EPAD | - | - | Exposed pad. Connect to ground. |


ZJW Microelectronics Ltd. All rights reserved

## Absolute Maximum Ratings [1]

| Parameter | Rating |
|---|---|
| $V_{DD}$, REF, VIO to GND | -0.3 V ~ 6 V |
| REF, VIO to $V_{DD}$ | -6 V ~ 0.3 V |
| Analog Input Range (IN+, IN− to GND) | -0.3 V ~ $V_{DD}$ + 0.3 V |
| Digital Input to GND | -0.3 V ~ VIO + 0.3 V |
| Digital Output to GND | -0.3 V ~ VIO + 0.3 V |
| Storage Temperature Range | -65 °C to +150 °C |
| Junction Temperature Range | 150 °C |
| Lead Temperature (Soldering, 10 seconds) | 300 °C |
| Maximum Reflow Temperature [2] | 260 °C |
| Electrostatic Discharge (ESD) [3] | |
| Human Body Model (HBM) [4] | 1.5 kV |
| Charged Device Model (CDM) [5] | 1 kV |

## Thermal Resistance [6]

| Package Type | $\theta_{JA}$ | $\theta_{JC}$ | Unit |
|---|---|---|---|
| MSOP-10 | 150 | 50 | °C/W |
| DFN-10 | 43 | 5.5 | °C/W |

[1] These ratings apply at 25 °C, unless otherwise noted. Stresses above these ratings may cause permanent damage. Exposure to absolute maximum conditions for extended periods may degrade device reliability. These are stress ratings only, and functional operation of the device at these or any other conditions beyond those specified is not implied.

[2] IPC/JEDECJ–STD-020 Compliant.

[3] Charged devices and circuit boards can discharge without detection. Although this product features patented or proprietary protection circuitry, damage may occur on devices subjected to high energy ESD. Therefore, proper ESD precautions should be taken to avoid performance degradation or loss of functionality.

[4] ANSI/ESDA/JEDEC JS-001 Compliant.

[5] ANSI/ESDA/JEDEC JS-002 Compliant.

[6] $\theta_{JA}$ addresses the conditions for soldering devices onto circuit boards to achieve surface mount packaging.


ZJW Microelectronics Ltd. All rights reserved

## Specifications

The ● denotes the full temperature range for specified performance. Unless otherwise noted, $V_{DD}$ = 4.75 V ~ 5.25 V, $V_{REF}$ = $V_{DD}$, $T_A$ = 25 °C.

| Parameter | Symbol | Conditions | | Min | Typ | Max | Unit |
|---|---|---|---|---|---|---|---|
| **Resolution** | | | | 18 | | | bits |
| **Input Characteristics** | | | | | | | |
| Voltage Range | | IN+ to IN- | ● | 0 | | $+V_{REF}$ | V |
| Absolute input voltage | | IN+ | ● | -0.1 | | $V_{REF}$ + 0.1 | V |
| | | IN- | ● | -0.1 | | +0.1 | V |
| Common Mode Rejection Ratio | CMRR | $f_{IN}$ = 250 kHz | | | 57 | | dB |
| Leakage Current | | Acquisition Phase | | | 1 | | nA |
| Input Impedance [1] | | | | | | | |
| **Throughput** | | | | | | | |
| Conversion Rate | | | ● | | | 400 | kSPS |
| Transient Response | | Full-scale step | ● | | | 420 | ns |
| **DC Accuracy** | | | | | | | |
| No Missing Codes | | | ● | 18 | | | bits |
| Integral Nonlinear Error | INL | | ● | -3.5 | ±2.5 | +3.5 | LSB [2] |
| Differential Nonlinear Error | DNL | | ● | -0.99 | -0.9/+1.5 | +2.5 | LSB |
| Transition Noise | | $V_{REF}$ = $V_{DD}$ = 5 V | ● | | 0.95 | | LSB |
| Gain Error | GE | | ● | -40 | ±2 | ±40 | LSB |
| Gain Error Temperature Drift | | | ● | | ± 0.3 | | ppm/°C |
| Zero Error | ZE | | ● | -20 | ±4 | +20 | LSB |
| Zero Temperature Drift | | | | | ±0.3 | | ppm/°C |
| Power Supply Sensitivity | | $V_{DD}$ = 5 V ± 5% | | | ±1 | | ppm |
| **AC Accuracy** | | | | | | | |
| Dynamic Range | DR | $V_{REF}$ = 5 V | ● | 94 | 95 | | dB [3] |
| SNR | SNR | $f_{IN}$ = 1 kHz, $V_{REF}$ = 5 V | ● | 93 | 94.5 | | dB |
| | | $f_{IN}$ = 1 kHz, $V_{REF}$ = 2.5 V | ● | 91 | 92.5 | | dB |
| Spurious-Free Dynamic Range | SFDR | $f_{IN}$ = 1 kHz, $V_{REF}$ = 5 V | | | 104 | | dB |
| Total Harmonic Distortion | THD | | | | -105 | | dB |
| Signal-to (Noise + Distortion) | SINAD | $f_{IN}$ = 1 kHz, $V_{REF}$ = 5 V | ● | 92.8 | 94.2 | | dB |
| Intermodulation Distortion | IMD | $f_{IN}$ = 1 kHz, $V_{REF}$ = 5 V | | | -97 | | dB |
| **Reference** | | | | | | | |
| Voltage Range | | | ● | 0.5 | | $V_{DD}$ + 0.3 | V |
| Load Current | | Sine Wave Input | | | 140 | | μA |

1 See the Analog Inputs section.
2 LSB means least significant bit. 1 LSB = 19.1 μV for 5 V input range.
3 Unless otherwise noted, all specifications expressed in decibels (dB) are referenced to full-scale input FSR and are tested with an input signal 0.5 dB below full-scale.


ZJW Microelectronics Ltd. All rights reserved

| Parameter | Symbol | Conditions | | Min | Typ | Max | Unit |
|---|---|---|---|---|---|---|---|
| **Sampling Dynamics** | | | | | | | |
| -3 dB Input Bandwidth | | $V_{DD}$ = 5 V | | | 6.5 | | MHz |
| Aperture Delay | | $V_{DD}$ = 5 V | | | 3 | | ns |
| **Digital Input** | | | | | | | |
| Logic Level | $V_{IL}$ | | ● | -0.3 | | 0.3 x VIO | V |
| | $V_{IH}$ | | ● | 0.7 x VIO | | VIO + 0.3 | V |
| | $I_{IL}$ | | ● | -1 | | +1 | µA |
| | $I_{IH}$ | | ● | -1 | | +1 | µA |
| **Digital Output** | | | | | | | |
| Data Format | | | | Serial 18 - bit, Straight Binary | | | |
| Pipeline Delay | | | | Upon the conversion is complete, the code is ready for reading | | | |
| | $V_{OL}$ | $I_{OUT}$ = +200 µA | ● | | | 0.4 | V |
| | $V_{OH}$ | $I_{OUT}$ = -200 µA | ● | VIO - 0.3 | | | V |
| **Power Supplies** | | | | | | | |
| Analog Power | $V_{DD}$ | Specified | ● | 4.75 | | 5.25 | V |
| Analog Power | $V_{DD}$ | Functional | | 2.7 | | 5.5 | |
| Digital Interface Power | VIO | Specified performance | ● | 2.3 | | $V_{DD}$ + 0.3 | V |
| VIO Range | | | | 1.8 | | $V_{DD}$ + 0.3 | V |
| Stand-by Current [4,5] | | $V_{DD}$ and VIO = 5 V | ● | | 2 | 50 | nA |
| Power Consumption | | $V_{DD}$ = 5 V, 100 SPS throughput | | | 4 | | µW |
| | | $V_{DD}$ = 5 V, 100 kSPS throughput | ● | | 4 | 4.8 | mW |
| | | $V_{DD}$ = 5 V, 400 kSPS throughput | ● | | 14 | 17 | mW |
| Energy per Conversion | | | | | 40 | | nJ/sample |
| **Temperature Range** | | | | | | | |
| Specified Performance | | $T_{MIN}$ to $T_{MAX}$ | | -40 | | +85 | °C |

[4] In the acquisition phase.
[5] All digital inputs are forced to VIO or GND as required.


ZJW Microelectronics Ltd. All rights reserved

## Timing Specifications

The ● denotes the full temperature range for specified performance. Unless otherwise specified, $T_A$ = 25 °C, $V_{DD}$ = 4.75 V ~ 5.25 V, VIO = 2.3 V ~ $V_{DD}$, $V_{REF}$ = $V_{DD}$.

| Parameter | Symbol | | Min | Typ | Max | Unit |
|---|---|---|---|---|---|---|
| Conversion Time: CNV Rising Edge to Data Available | $t_{CONV}$ | ● | 1.0 | | 2.08 | μs |
| Acquisition Time | $t_{ACQ}$ | ● | 420 | | | ns |
| Time Between Conversions | $t_C$ | ● | 2.5 | | | μs |
| CNV Pulse Width ($\overline{CS}$ Mode) | $t_{CNVH}$ | ● | 10 | | | ns |
| SCK Period ($\overline{CS}$ Mode) | $t_{SCK}$ | ● | 15 | | | ns |
| SCK Period (Chain Mode) | $t_{SCK}$ | | | | | |
| VIO above 4.5 V | | ● | 17 | | | ns |
| VIO above 3 V | | ● | 18 | | | ns |
| VIO above 2.3 V | | ● | 20 | | | ns |
| SCK Low Time | $t_{SCKL}$ | ● | 7 | | | ns |
| SCK High Time | $t_{SCKH}$ | ● | 7 | | | ns |
| SCK Falling Edge to Data Remain Valid | $t_{HSDO}$ | ● | 4 | | | ns |
| SCK Falling Edge to Data Valid Delay | $t_{DSDO}$ | | | | | |
| VIO above 4.5 V | | ● | | | 14 | ns |
| VIO above 3 V | | ● | | | 15 | ns |
| VIO above 2.3 V | | ● | | | 17 | ns |
| CNV or SDI Low to SDO D17 MSB Valid ($\overline{CS}$ Mode) | $t_{EN}$ | | | | | |
| VIO above 4.5 V | | ● | | | 20 | ns |
| VIO above 3 V | | ● | | | 22 | ns |
| VIO above 2.3 V | | ● | | | 25 | ns |
| CNV or SDI High or Last SCK Falling Edge to SDO High Impedance ($\overline{CS}$ Mode) | $t_{DIS}$ | ● | | | 25 | ns |
| SDI Valid Setup Time from CNV Rising Edge ($\overline{CS}$ Mode) | $t_{SSDICNV}$ | ● | 15 | | | ns |
| SDI Valid Hold Time from CNV Rising Edge ($\overline{CS}$ Mode) | $t_{HSDICNV}$ | ● | 3 | | | ns |
| SCK Valid Setup Time from CNV Rising Edge (Chain Mode) | $t_{SSCKCNV}$ | ● | 5 | | | ns |
| SCK Valid Hold Time from CNV Rising Edge (Chain Mode) | $t_{HSCKCNV}$ | ● | 5 | | | ns |
| SDI Valid Setup Time from SCK Falling Edge (Chain Mode) | $t_{SSDISCK}$ | ● | 3 | | | ns |
| SDI Valid Hold Time from SCK Falling Edge (Chain Mode) | $t_{HSDISCK}$ | ● | 4 | | | ns |
| SDI High to SDO High (Chain Mode with Busy Indicator) | $t_{DSDOSDI}$ | | | | | |
| VIO above 4.5 V | | ● | | | 17 | ns |
| VIO above 2.3 V | | ● | | | 27 | ns |


ZJW Microelectronics Ltd. All rights reserved

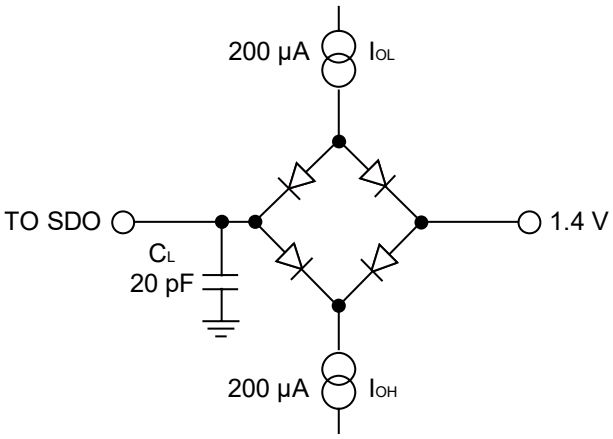


Figure 5. Load Circuit for Digital Interface Timing

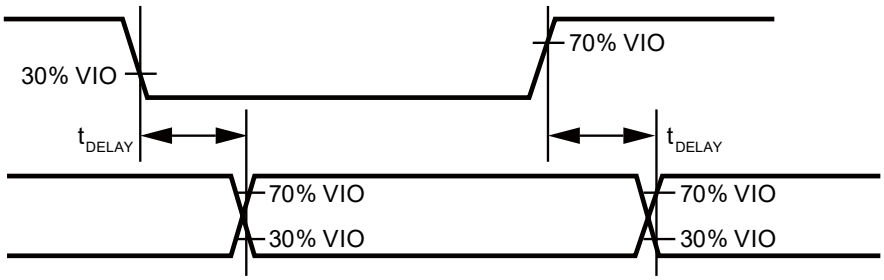


Figure 6. Voltage Levels for Timing


ZJW Microelectronics Ltd. All rights reserved

## Typical Performance Characteristics

Unless otherwise noted, $V_{DD}$ = 5.0 V, REF = 5.0 V, VIO = 3.3 V, $T_A$ = 25 °C.

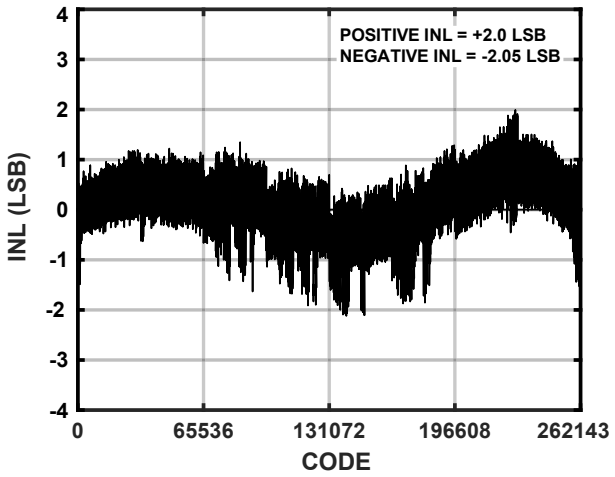


Figure 7. Integral Nonlinearity vs. Code

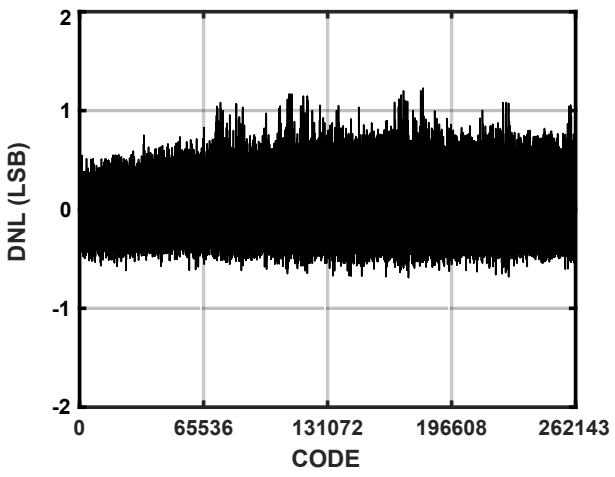


Figure 8. Differential Nonlinearity vs. Code

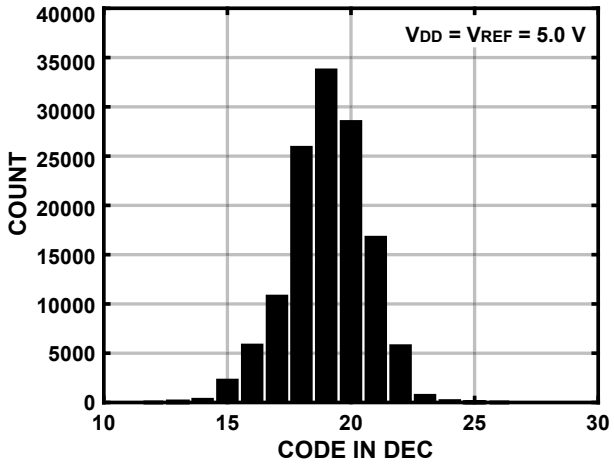


Figure 9. Histogram of DC Input (Code Center)

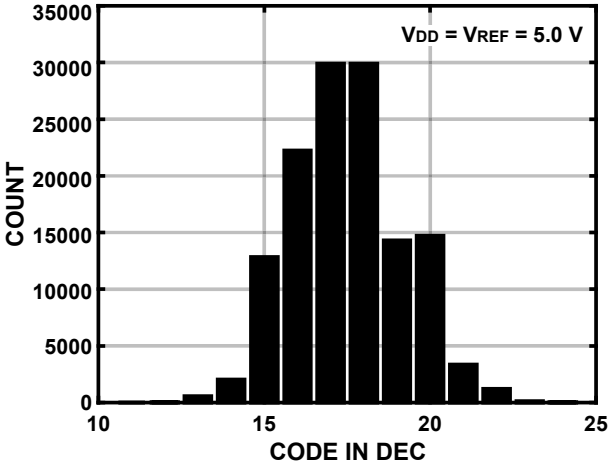


Figure 10. Histogram of DC Input (Code Transition)

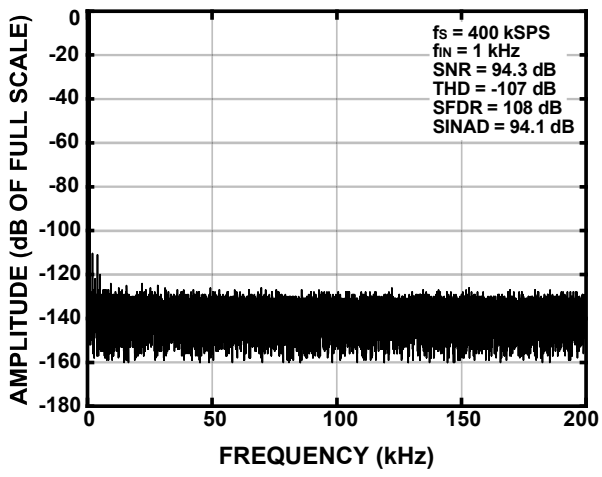


Figure 11. FFT Plot

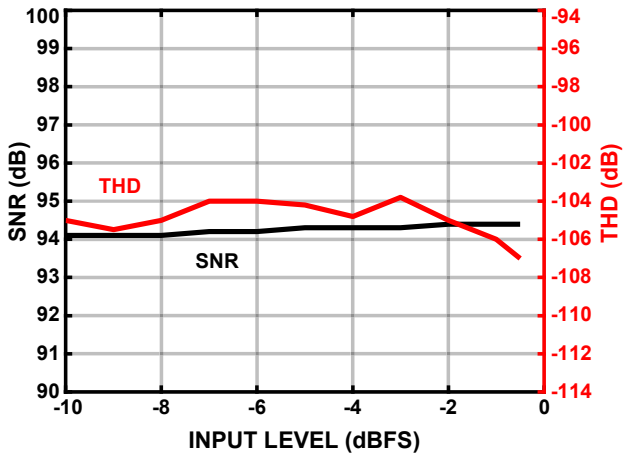


Figure 12. SNR, THD vs. Input Level


ZJW Microelectronics Ltd. All rights reserved

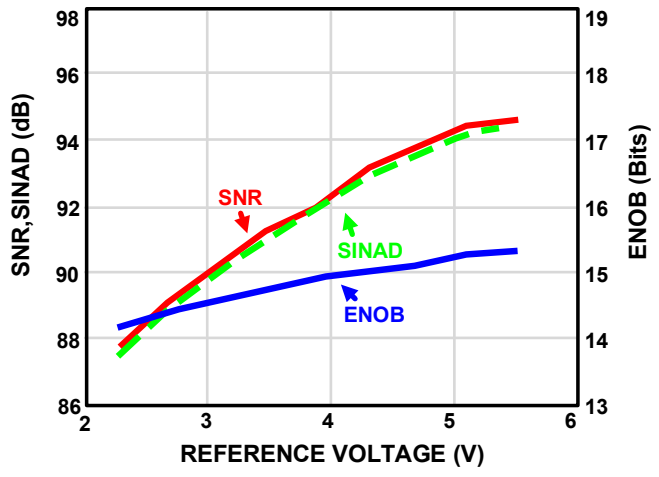


Figure 13. SINAD and ENOB vs. Reference Voltage

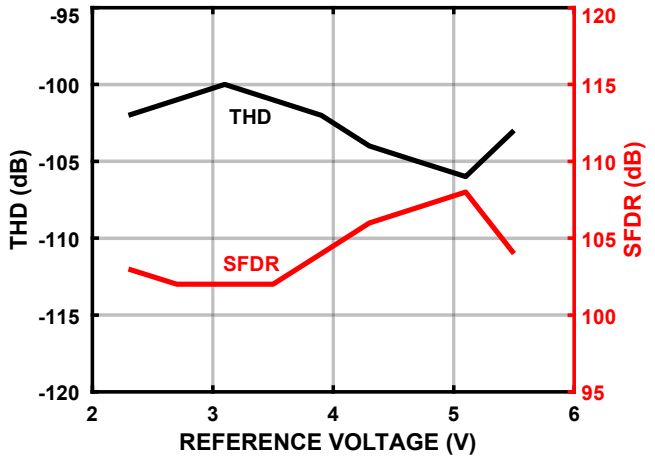


Figure 14. THD, SFDR vs. Reference Voltage

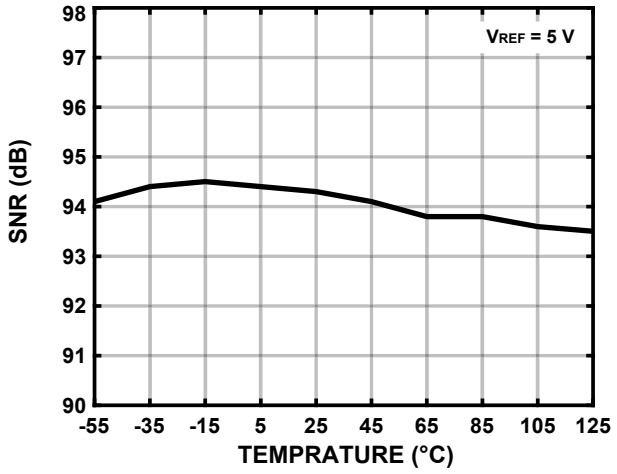


Figure 15. SNR vs. Temperature

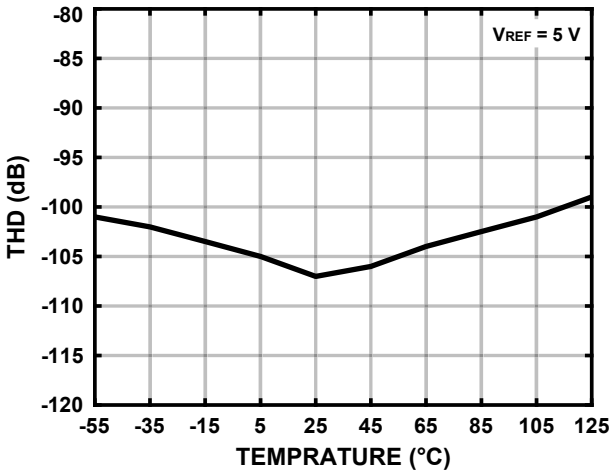


Figure 16. THD vs. Temperature

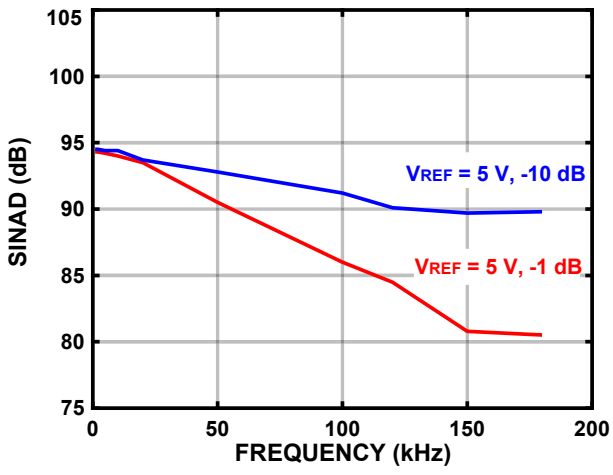


Figure 17. SINAD vs. Frequency

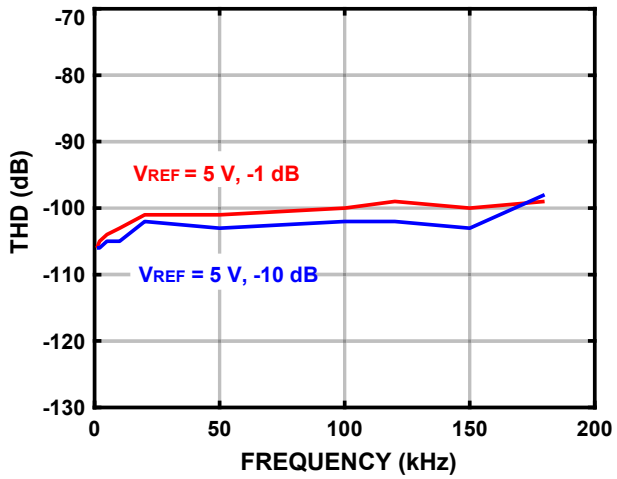


Figure 18. THD vs. Frequency


ZJW Microelectronics Ltd. All rights reserved

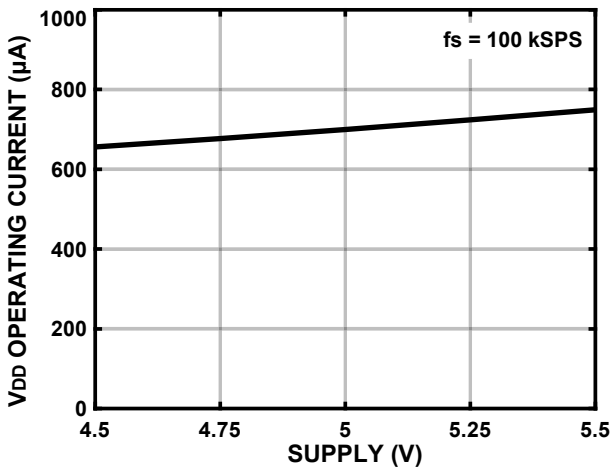


Figure 19. $V_{DD}$ Operating Current vs. Power Supply Voltage

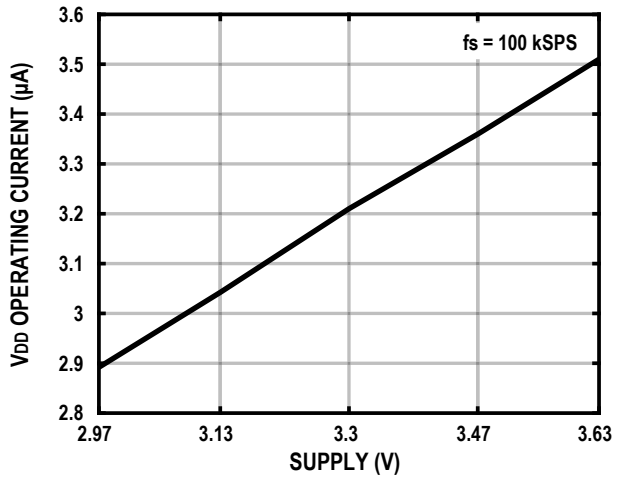


Figure 20. VIO Operating Current vs. Power Supply Voltage

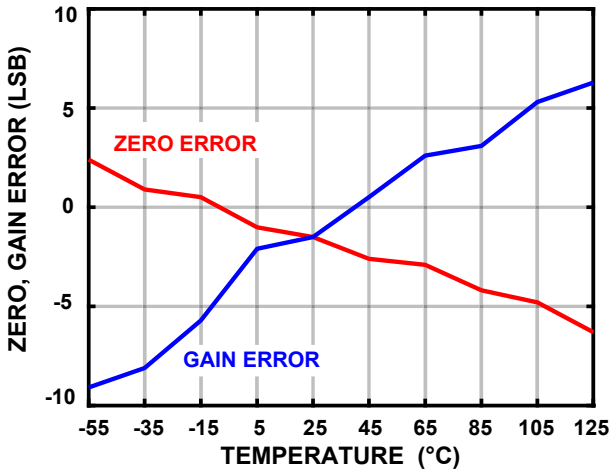


Figure 21. Zero Input, Gain Error vs. Temperature

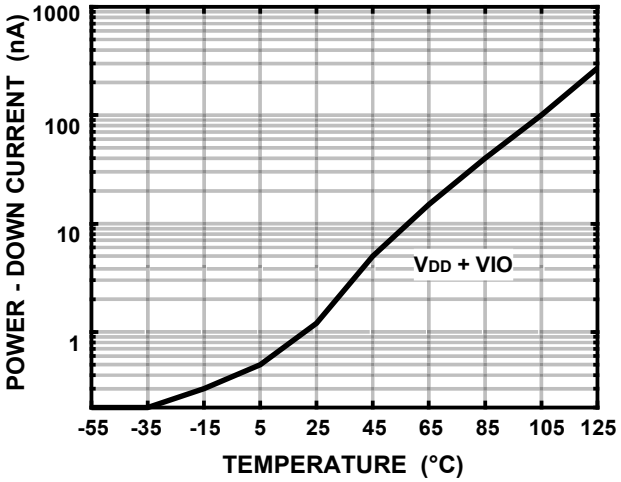


Figure 22. Stand-by Current vs. Temperature

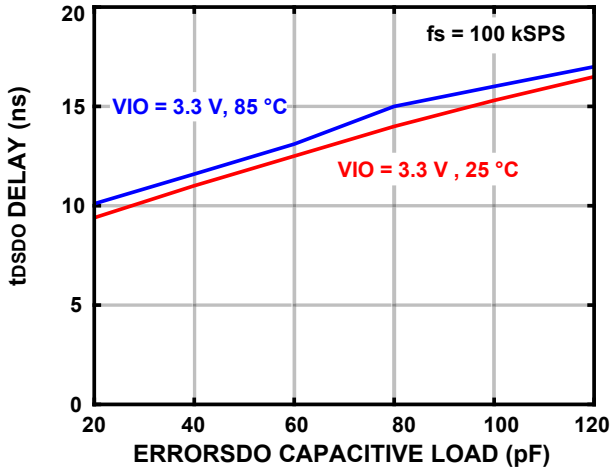


Figure 23. $t_{DSDO}$ Delay vs Capacity Load and Voltage

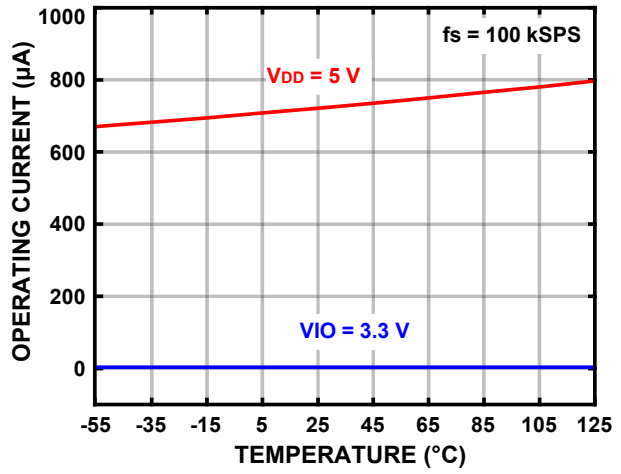


Figure 24. Operating Current vs. Temperature


ZJW Microelectronics Ltd. All rights reserved

## Theory of Operation

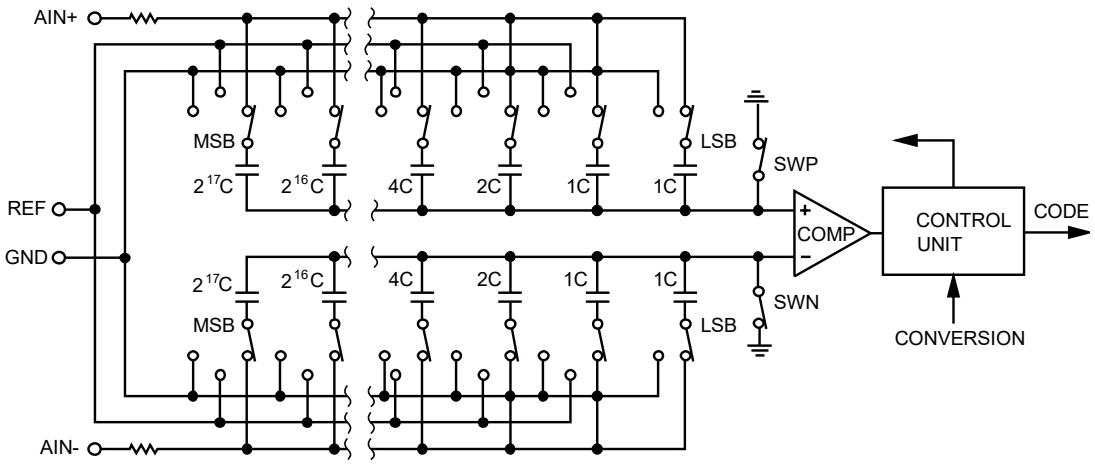


Figure 25. ADC Simplified Circuit Diagram

### Circuit Structure

ZJC2004 is a fast, high precision, low power consumption, true 18-bit pseudo differential input successive approximation analog-to-digital converter (SAR ADC). The ZJC2004 is capable of converting 400 k samples per second (400 kSPS), with the device entering stand-by mode between conversions. Typical power consumption is 35 μW when operating at 1 kSPS, making it ideal for low-power applications.

The ZJC2004 can interface with any 1.8 V to 5 V (or $V_{DD}$) digital logic level and is available in a 10-lead MSOP package or a 10-lead DFN (LFCSP) package which saves space. It is fully pin compatible with 16-bit ADC ZJC2002.

### Converter Operations

Figure 25 is a simplified circuit diagram of ZJC2004. It is based on a charge redistribution DAC.

During the acquisition phase, the array node connected to the input of the comparator is short connect to GND via the SW+ and SW-. All individual switches are connected to analog inputs. Therefore, the capacitor array is used as the sampling capacitor, sampling analog signal at the IN+ and IN- input. When the acquisition phase is complete and a rising edge occurs on the CNV input, the conversion phase is initiated. When the conversion phase begins, the SW+ and SW- disconnect first. The two capacitor arrays are then disconnected from the input and connected to the GND input. By switching the elements of the capacitor array between GND and REF, the comparator input will vary in binary weighted voltage steps ($V_{REF}/2^1$, $V_{REF}/2^2$, ... ,$V_{REF}/2^{17}$ ). The control logic toggles these switches in sequence starting with the MSB, and the comparator is brought back into balance each time. After this process is complete, the device returns to the acquisition phase, and the control logic generates the ADC output code and busy signal indication. ZJC2004 has an on-chip conversion clock, so the conversion process does not require an external serial clock SCK.


ZJW Microelectronics Ltd. All rights reserved

## Transfer Function

The ideal transfer function of ZJC2004 is shown in Figure 26.

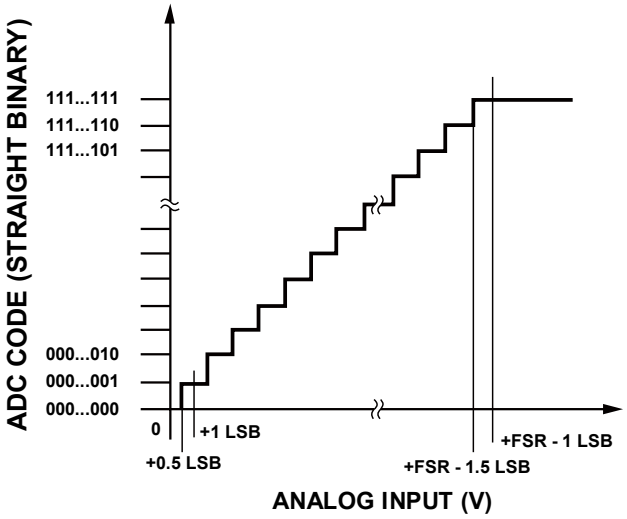


Figure 26. ADC ideal transfer function

Output Code and Ideal Input Voltage:

| Description | Analog Input $V_{REF}$ = 5 V | Digital Output (Hex) |
|---|---|---|
| FSR - 1 LSB | +4.999981 V | 0x3FFFF [1] |
| Midscale +1 LSB | 2.500019 V | 0x20001 |
| Midscale | 2.5 V | 0x20000 |
| Midscale - 1 LSB | 2.499981 V | 0x1FFFF |
| -FSR + 1 LSB | 19.1 µV | 0x00001 |
| -FSR | 0 V | 0x00000 [2] |

[1] This is also the code for an over-ranged analog input (VIN+ – VIN- above $V_{REF}$ – $V_{GND}$).
[2] This is also the code for an under-ranged analog input (VIN+ – VIN- below $V_{GND}$).


ZJW Microelectronics Ltd. All rights reserved

## Typical Connection Diagram

Figure 27 is a suggested connection diagram for the ZJC2004 when multiple power supplies are used.

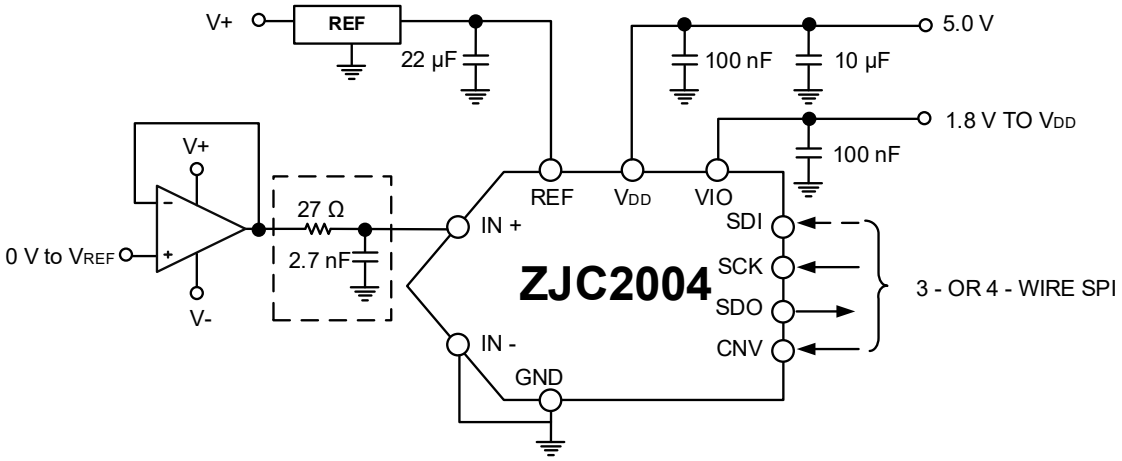


Figure 27. Application Circuits Using Multiple Power Supplies

Figure 28 shows the equivalent circuit of the ZJC2004 input structure.

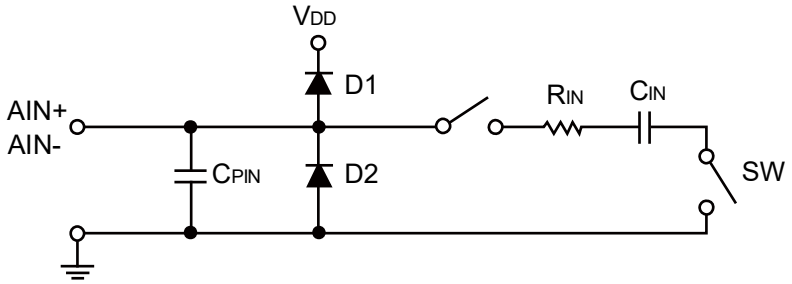


Figure 28. Two Diodes D1 and D2 Provide ESD Protection for the Analog Inputs

Note that the voltage of the analog input signal cannot be higher than the supply voltage ($V_{DD}$) by more than 0.3 V. If the voltage of the analog input signal exceeds $V_{DD}$ + 0.3 V, the diode will be forward biased and start conducting current. These two diodes can handle forward bias currents up to 50 mA. If the supply voltage of the input driver is higher than $V_{DD}$ the voltage of the analog input signal may be more than 0.3 V higher than the supply voltage. The two diodes D1 and D2 provide ESD protection for analog input IN+ and IN-.

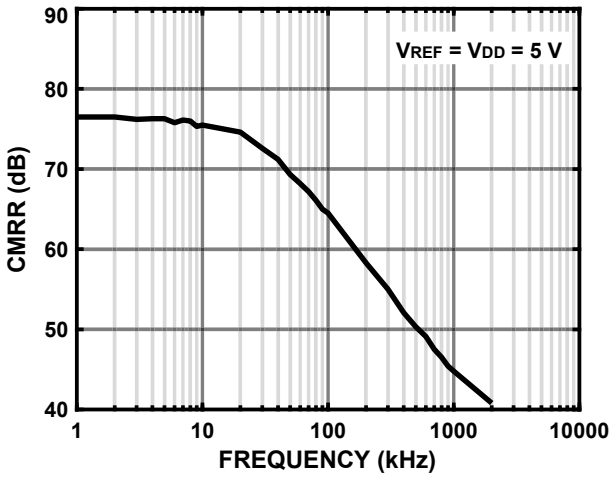


Figure 29. Analog Input CMRR vs. Frequency


ZJW Microelectronics Ltd. All rights reserved

During the acquisition phase, the impedance of the analog input (IN+) can be seen as the parallel combination of the network formed by $R_{IN}$ and $C_{IN}$ in series and the capacitor $C_{PIN}$. $C_{PIN}$ mainly includes pin capacitance. $R_{IN}$ typical value is 700 Ω and is a lumped element consisting of the series resistance and the on-resistance of the switch. $C_{IN}$ typical value is 30 pF and consists mainly of the ADC sampling capacitor. High source impedance can significantly affect AC characteristics, especially harmonic distortion. THD degradation is a function of source impedance and analog input frequency.

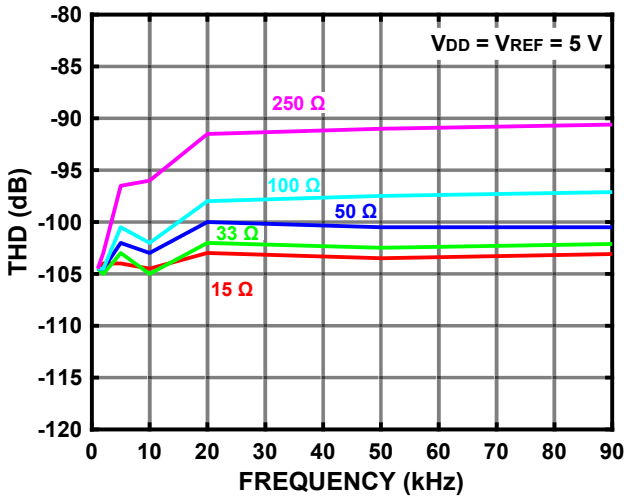


Figure 30. THD vs. Analog Input Frequency and Source Resistance

## Fully Differential to Single-ended Driver

For applications using fully differential analog signals (bipolar or unipolar), an op amp driver can provide pseudo differential unipolar input to the ZJC2004, see Figure 31 for the schematic diagram.

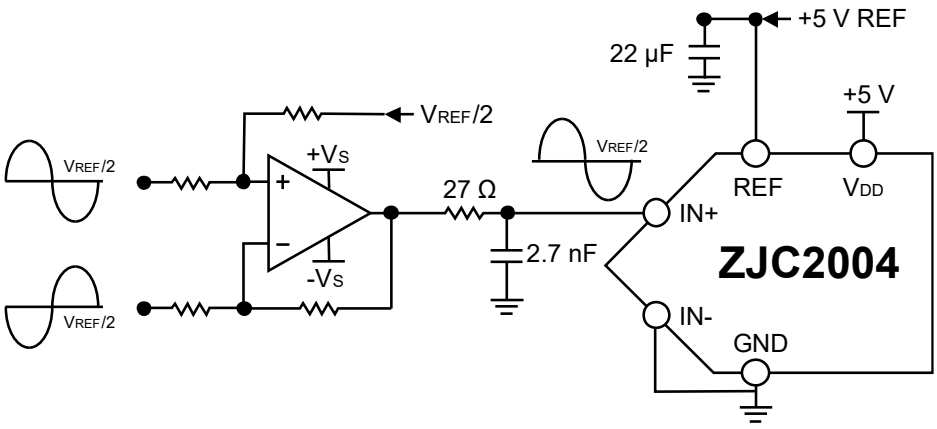


Figure 31. Fully Differential to Single-ended Conversion with an Op Amp

Singled-ended bipolar signal can be converted to pseudo differential unipolar signal with two amplifiers for ZJC2004.


ZJW Microelectronics Ltd. All rights reserved

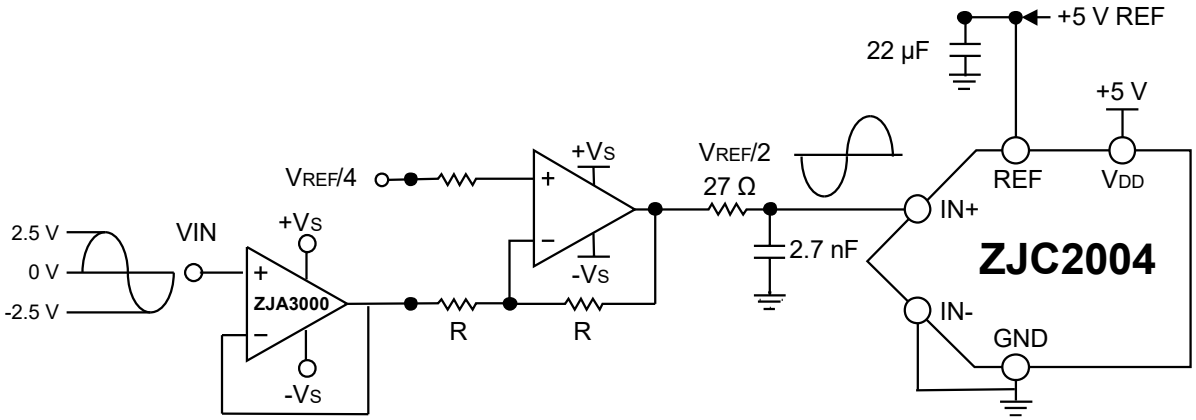


Figure 32. Single-ended Bipolar to Pseudo Differential Unipolar

## Reference Voltage Input

For high-precision ADC applications, a precision voltage reference is an essential device. Generally, for 18-bit ADCs, the reference source needs to have low initial error, low noise, and low temperature drift. The ZJC2004 reference voltage REF has a dynamic input impedance, so it should be driven with a low impedance source. The REF and GND pins should be effectively decoupled as described in the PCB Layout Guidelines section. Figure 33 shows an example of a specific voltage reference and driver design. The ZJR100X series of high-precision voltage references can just meet these requirements.

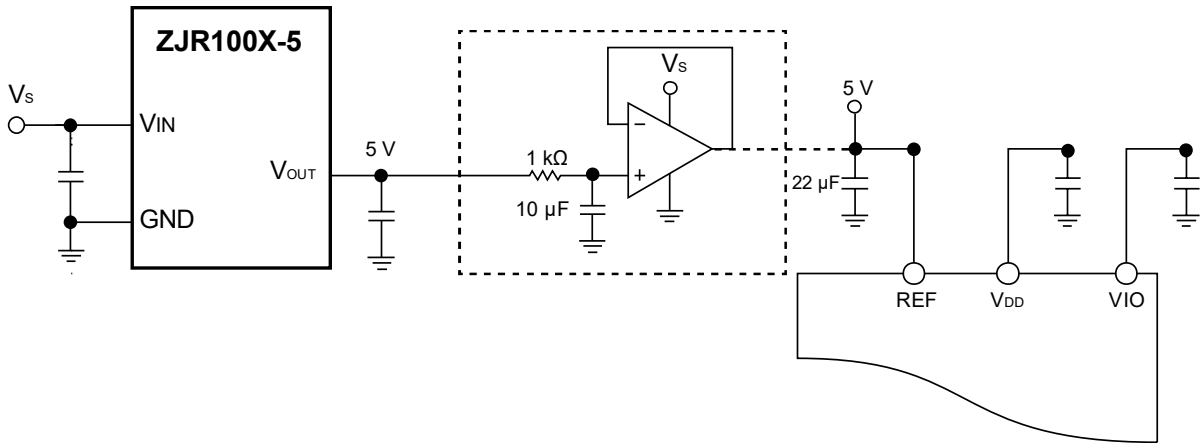


Figure 33. ZJC2004 Reference Pin Drive

## Power Supply

ZJC2004 uses two power supply pins: core power supply ($V_{DD}$) and digital input/output interface power supply VIO. VIO can directly interface with any logic from 1.8 V to $V_{DD}$. To reduce the number of power supplies required, the VIO and $V_{DD}$ pins can be tied together via resistors or ferrite beads. The PSRR curve is shown in Figure 34.


ZJW Microelectronics Ltd. All rights reserved

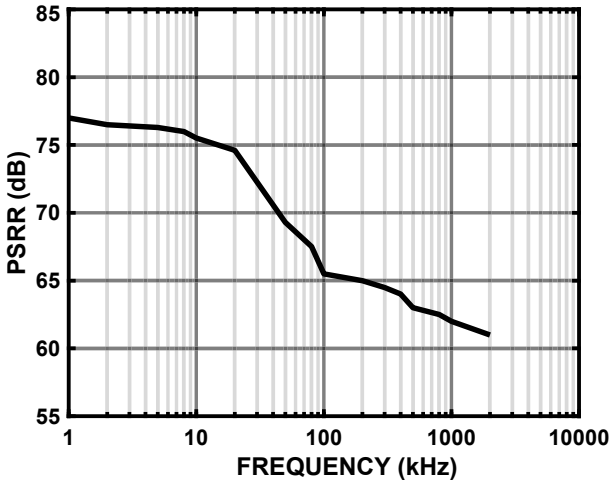


Figure 34. PSRR vs. Frequency

The ZJC2004 automatically enters stand-by mode at the end of each conversion stage, so the power consumption is approximately linearly proportional to the sampling rate. This makes the device suitable for low sampling rate and low power consumption applications. As shown Figure 35.

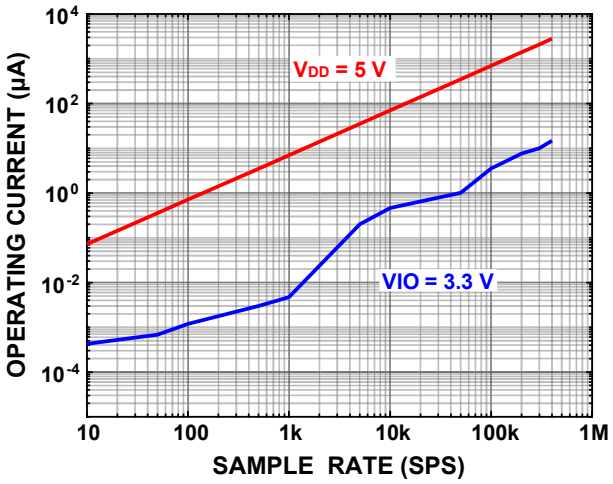


Figure 35. Operating Current vs. Sampling Rate

## Digital Interface

ZJC2004 has great flexibility in serial interface mode. In $\overline{CS}$ mode, ZJC2004 is compatible with SPI, MCU and DSP. In this mode, ZJC2004 can use 3-wire or 4-wire interface. The 3-wire interface uses CNV, SCK, and SDO signals. The 4-wire interface uses the SDI, CNV, SCK, and SDO signals, with CNV for initiating conversions independent of the read back timing (SDI). In the chain mode, ZJC2004 provides the daisy chain feature, which allows the cascading of multiple ADCs. If SDI is high, $\overline{CS}$ mode is selected, and if SDI is low, chain mode is selected. Chain mode is always selected when SDI and CNV are connected together.

ZJC2004 can provide the option to forcibly add a start bit before the data bits. This start bit can be used as a busy indication. If there is no busy indication, the controller must wait for the maximum conversion time before reading back the code value. The busy indication function is enabled under the following conditions:

- In $\overline{CS}$ mode, CNV or SDI is low at the end of ADC conversion (see Figure 39 and Figure 43).
- In chain mode, SCK is high during the rising edge of CNV (see Figure 47).


ZJW Microelectronics Ltd. All rights reserved

## $\overline{CS}$ Mode (3-Wire without Busy Indication)

This mode can be used when a single chip ZJC2004 is connected to an SPI compatible controller. The connections are shown in Figure 36 and the corresponding timing is shown in Figure 37.

While SDI is high, a rising edge on CNV initiates a conversion, selects chip-select mode, and forces SDO into a high-impedance state. Once a transition is initiated, the transition will execute to completion regardless of the state of CNV. CNV must return high before the minimum conversion time elapses and then remain high for the maximum possible conversion time to avoid generating a busy signal indication. After the conversion is completed, the ZJC2004 enters the acquisition phase and enters the stand-by mode.

When CNV goes low, the MSB is output on SDO. The remaining data bits are clocked out on subsequent falling edges of SCK. After the 18th SCK falling edge, or when CNV goes high, whichever occurs first, SDO returns to a high-impedance state.

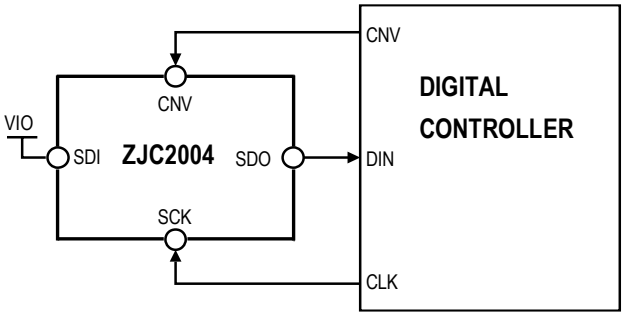


Figure 36. $\overline{CS}$ Mode (3-wire without Busy Indication) Connection Diagram

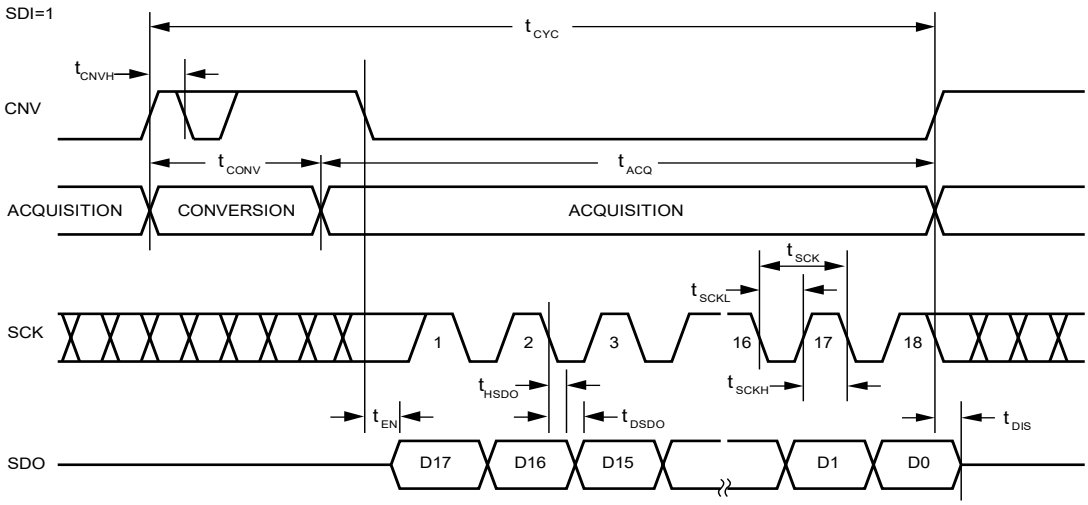


Figure 37. $\overline{CS}$ Mode (3-Wire without Busy Indication) Serial Interface Timing

## $\overline{CS}$ Mode (3-Wire with Busy Indication)

This mode can be used when a single ZJC2004 is connected to an SPI-compatible digital host with an interrupt input. The connections are shown in Figure 38 and the corresponding timing is shown in Figure 39.

When connecting SDI to VIO, a rising edge on CNV initiates a conversion, selects $\overline{CS}$ mode, and forces SDO into a high-impedance state. Regardless of the state of CNV, SDO remains high impedance until the conversion is complete. CNV must return to low before the minimum transition time has elapsed and then remain low for the maximum possible transition time to guarantee a busy signal indication. When the transition is complete, SDO changes from a high-impedance state to a low-impedance state. Combined with a pull-up resistor on the SDO line, this transition can be used as an interrupt signal. Next ZJC2004 enters the acquisition stage and enters the stand-by mode. Data bits are clocked out on subsequent falling edges of SCK, MSB first. After the optional 19th SCK falling edge, or when CNV goes high, whichever occurs first, SDO returns to a high-impedance state.


ZJW Microelectronics Ltd. All rights reserved

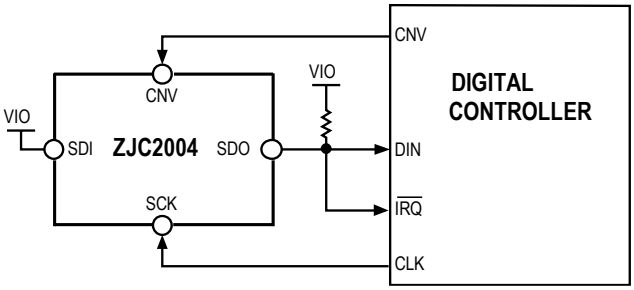


Figure 38. Chip select mode (three-wire type with busy indication) connection diagram

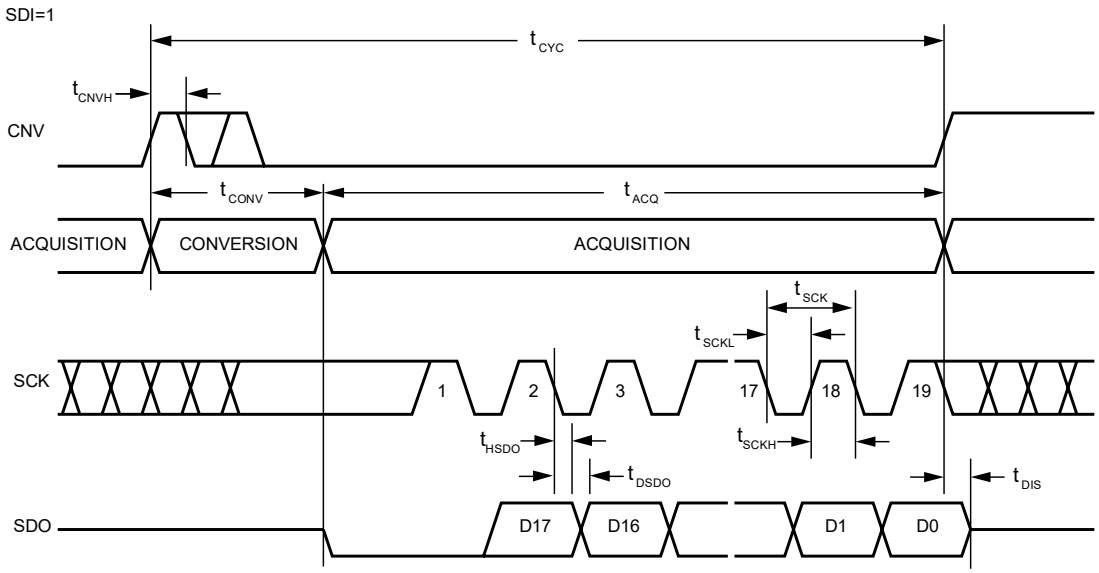


Figure 39. $\overline{CS}$ Mode (3-Wire with Busy Indication) Serial Interface Timing

## $\overline{CS}$ Mode (4-wire without Busy Indication)

An example using two ZJC2004s is shown in Figure 40, and the corresponding timing is shown in Figure 41.

With SDI high, a rising edge on CNV initiates a conversion, selects $\overline{CS}$ mode, and forces SDO into a high-impedance state. In this mode, CNV must be held high during the conversion phase and subsequent data readback. If SDI and CNV are low, SDO goes low.

SDI must keep or return high before the minimum transition time elapses and then remain high for the maximum possible transition time to avoid generating a busy signal indication. After the conversion is completed, the ZJC2004 enters the acquisition phase and enters the stand-by mode. Each ADC converted code value can be read by pulling the SDI input low, which outputs the MSB to SDO. The remaining data bits are clocked out on subsequent SCK falling edges. After the 18th SCK falling edge, or when SDI goes high, whichever occurs first, SDO returns to high impedance and another ZJC2004 can be read.

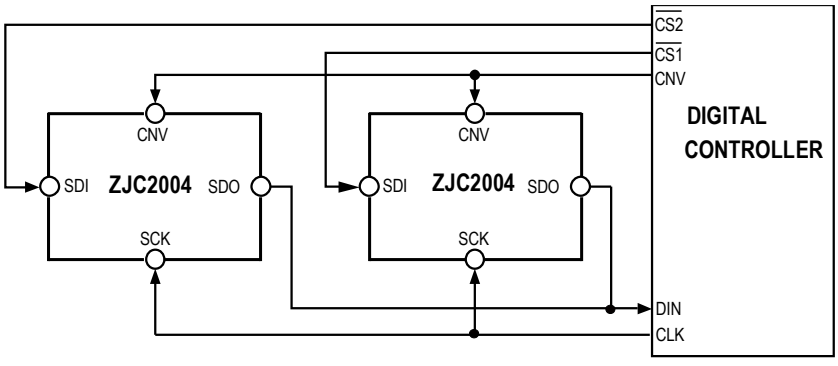


Figure 40. $\overline{CS}$ Mode (4-wire without Busy Indication) Connection Diagram


ZJW Microelectronics Ltd. All rights reserved

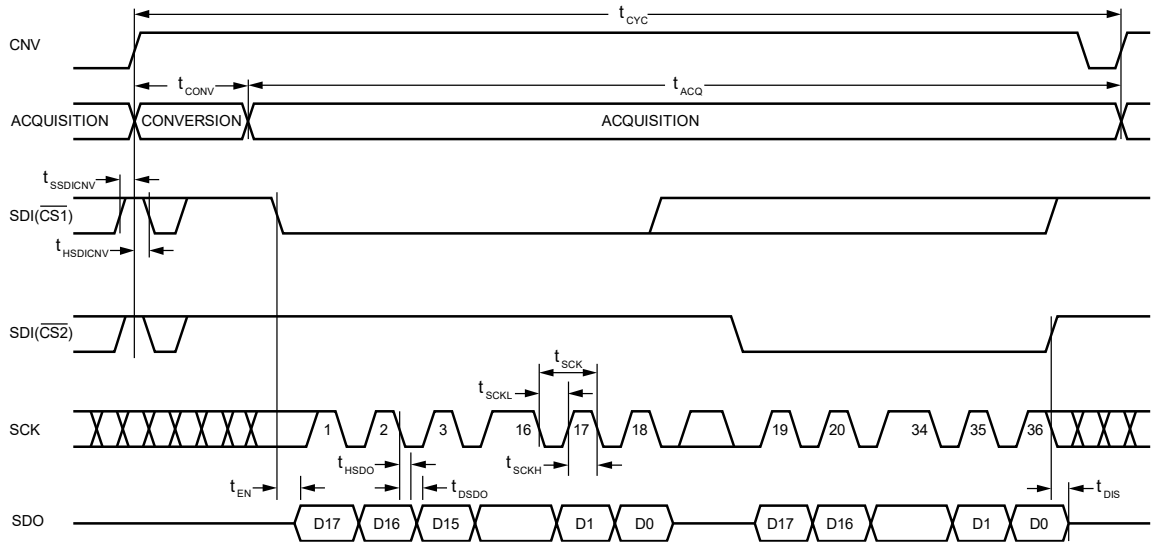


Figure 41. $\overline{CS}$ Mode (4-Wire without Busy Indication) Serial Interface Timing

## $\overline{CS}$ Mode (4-Wire with Busy Indication)

The connection is shown in Figure 42 and the corresponding timing is shown in Figure 43.

With SDI high, a rising edge on CNV initiates a conversion, selects $\overline{CS}$ mode, and forces SDO into a high-impedance state. In this mode, CNV must be held high during the conversion phase and subsequent data readback. If SDI and CNV are low, SDO goes low. SDI must return low before the minimum transition time elapses and then remain low for the maximum possible transition time to guarantee a busy signal indication. When the transition is complete, SDO changes from a high-impedance state to a low-impedance state. Combined with a pull-up resistor on the SDO line, this transition can be used as an interrupt signal to initiate data readback. Next, ZJC2004 enters the acquisition phase and is on stand-by. Data bits are clocked out on subsequent falling edges of SCK, MSB first. After the optional 19th SCK falling edge or after SDI goes high, whichever occurs first, SDO returns to a high-impedance state.

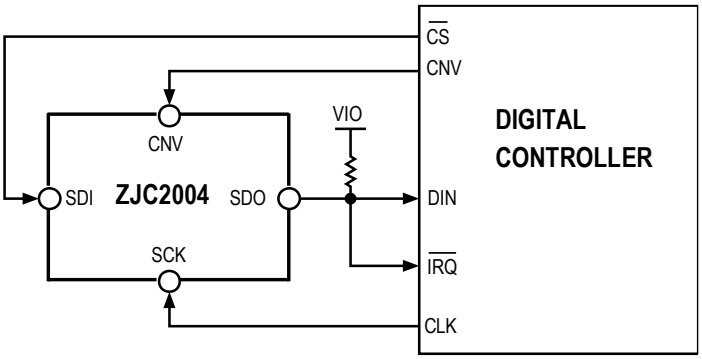


Figure 42. $\overline{CS}$ Mode (4-Wire with Busy Indication) Connection Diagram


ZJW Microelectronics Ltd. All rights reserved

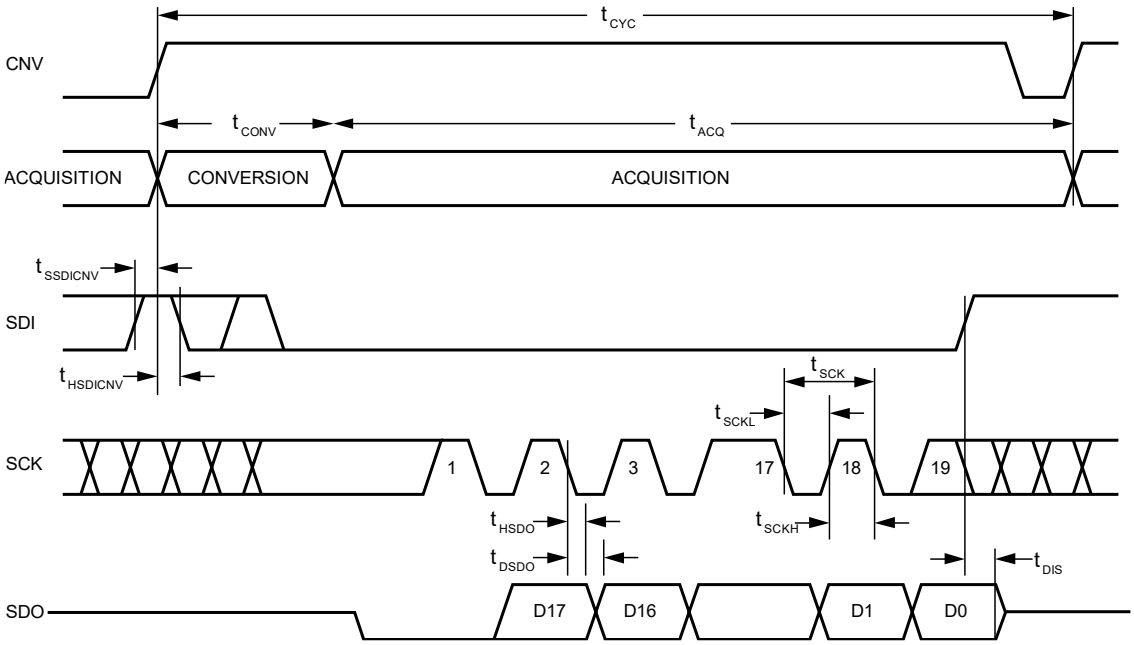


Figure 43. $\overline{CS}$ Mode (4-wire with Busy Indication) Serial Interface Timing

## Chain Mode (without Busy Indication)

This mode can be used to daisy-chain multiple ZJC2004s over a three-wire serial interface.

An example using two ZJC2004s is shown in Figure 44, and the corresponding timing is shown in Figure 45.

When SDI and CNV are low, SDO goes low. With SCK low, a rising edge on CNV initiates a conversion, selects chain mode, and disables the busy indication. In this mode, CNV remains high during the conversion phase and subsequent data readback. After the conversion is completed, the MSB is output to SDO, and ZJC2004 enters the acquisition phase and stands by. The remaining data bits stored in the internal shift register are clocked out on subsequent SCK falling edges. For each ADC, SDI feeds the input of the internal shift register and is clocked out by SCK falling edge. Each ADC in the chain outputs the data MSB first, and it takes 18×N clocks to read back N ADCs.

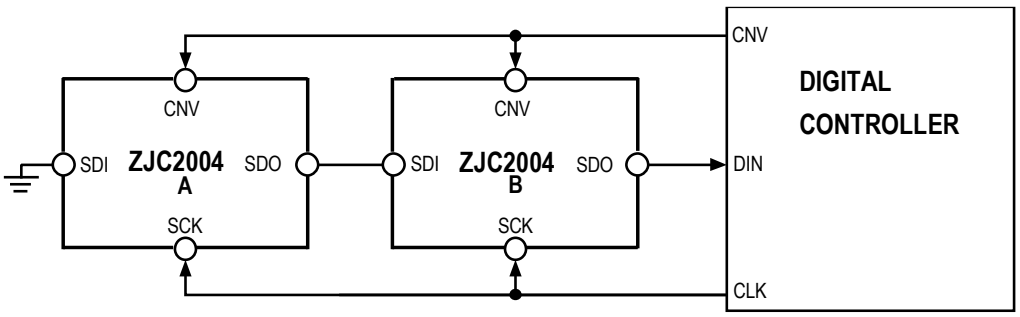


Figure 44. Chain Mode (without Busy Indication) Connection Diagram


ZJW Microelectronics Ltd. All rights reserved

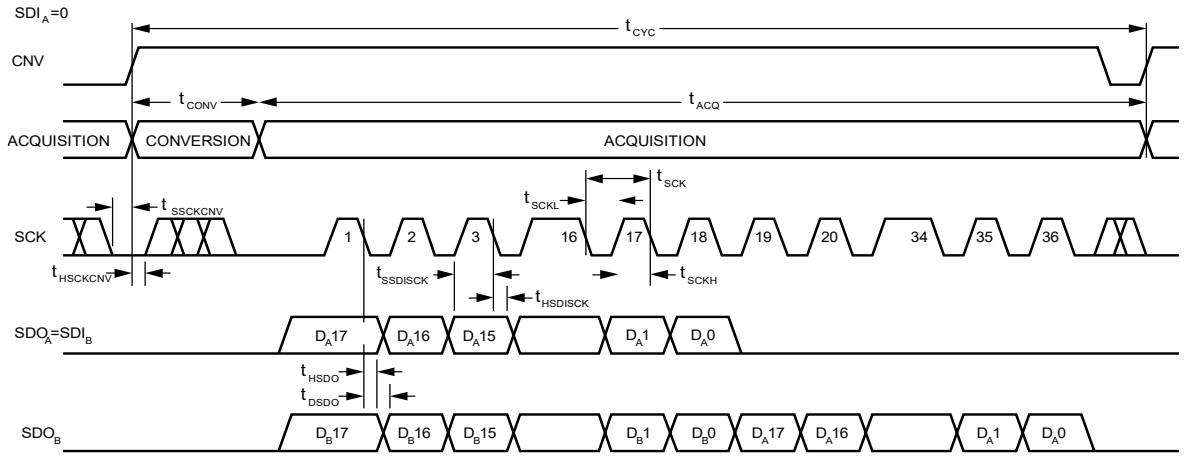


Figure 45. Chain Mode (without Busy Indication) Serial Interface Timing

## Chain Mode (with Busy Indication)

This mode can also be used to daisy-chain multiple ZJC2004s on the 3-wire serial interface while providing a busy indication.

An example using three ZJC2004s is shown in Figure 46, and the corresponding timing is shown in Figure 47.

When SDI and CNV are low, SDO goes low. With SCK high, a rising edge on CNV initiates a conversion, selects chain mode, and enables the busy indicator feature. In this mode, CNV remains high during the conversion phase and subsequent data readback. After all the ADCs in the chain have completed their conversions, drive the SDO pin of the ADC closest to the digital host (see Figure 46 This transition on SDO can be used as a busy indicator to trigger data readback. ZJC2004 then enters the acquisition phase and is on stand-by. The remaining data bits stored in the internal shift register are clocked out MSB first on subsequent SCK falling edges. For each ADC, SDI feeds the input of the internal shift register and is clocked out by SCK falling edge. Each ADC in the chain outputs data MSB first, and 18×N + 1 clocks are required to read back N ADCs.

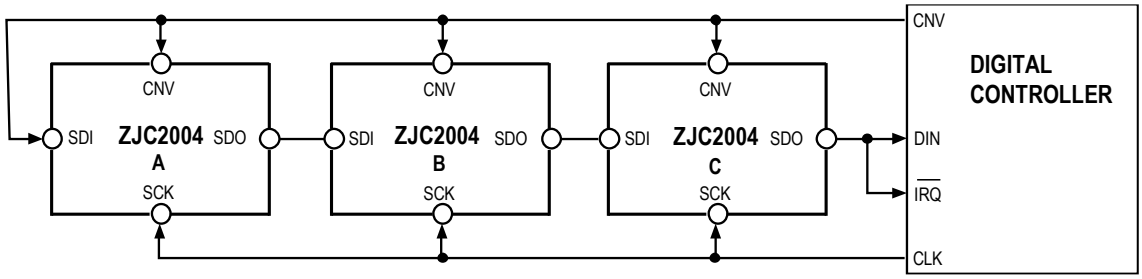


Figure 46. Chain Mode (with Busy Indication) Connection Diagram

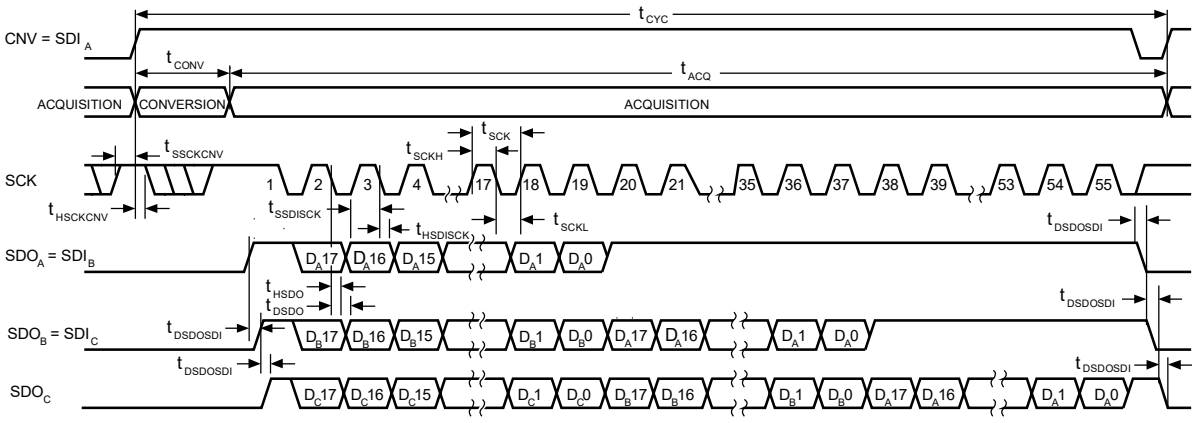


Figure 47. Chain Mode (with Busy Indication) Serial Interface Timing


ZJW Microelectronics Ltd. All rights reserved

## Layout Guidelines

For optimum performance of the device, good PCB layout practices are recommended, including:

- It is recommended that to use a design that separates the analog part and the digital part on the ZJC2004 PCB, and each is limited to a certain area of the circuit board.
- Avoid running digital lines under the device, which may couple noise onto the die, unless a ground plane under the ZJC2004 is used as a shield. Fast switching signals such as CNV or clocks should not be placed close to the analog signal path. Crossover of digital and analog signals should be avoided.
- At least one ground plane should be used. It can be common or split between the digital and analog sections. In the latter case, the planes should be joined close to the ZJC2004.
- The ZJC2004 voltage reference input, REF, has a dynamic input impedance and should be decoupled with 22 µF ceramic capacitors to minimize parasitic inductances. This is done by placing the reference decoupling ceramic capacitor close to, ideally right up against, the REF and GND pins and connecting them with wide, low impedance trace
- The power supply $V_{DD}$ of ZJC2004 should be decoupled with 10 µF and 100 nF ceramic capacitors, placed close to the ZJC2004 and connected using short, wide traces to provide low impedance paths and to reduce the effect of noises on the power supply lines.

Figure 48 is an example of the guidance.

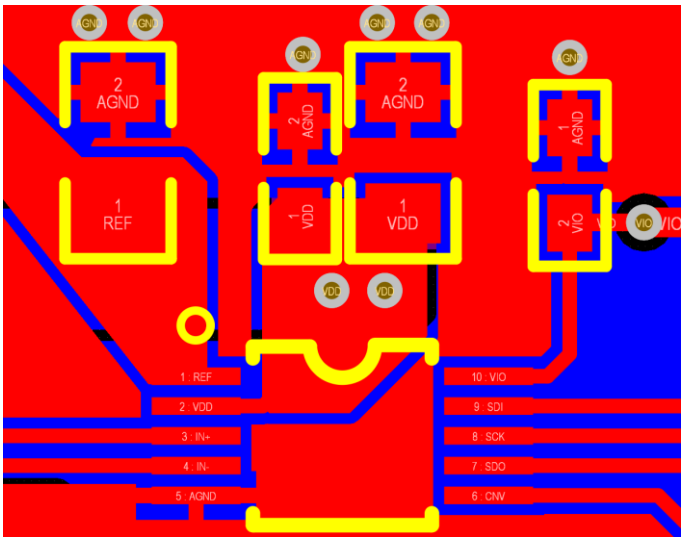


Figure 48. Example Layout and Routing of ZJC2004


ZJW Microelectronics Ltd. All rights reserved

## Outline Dimensions

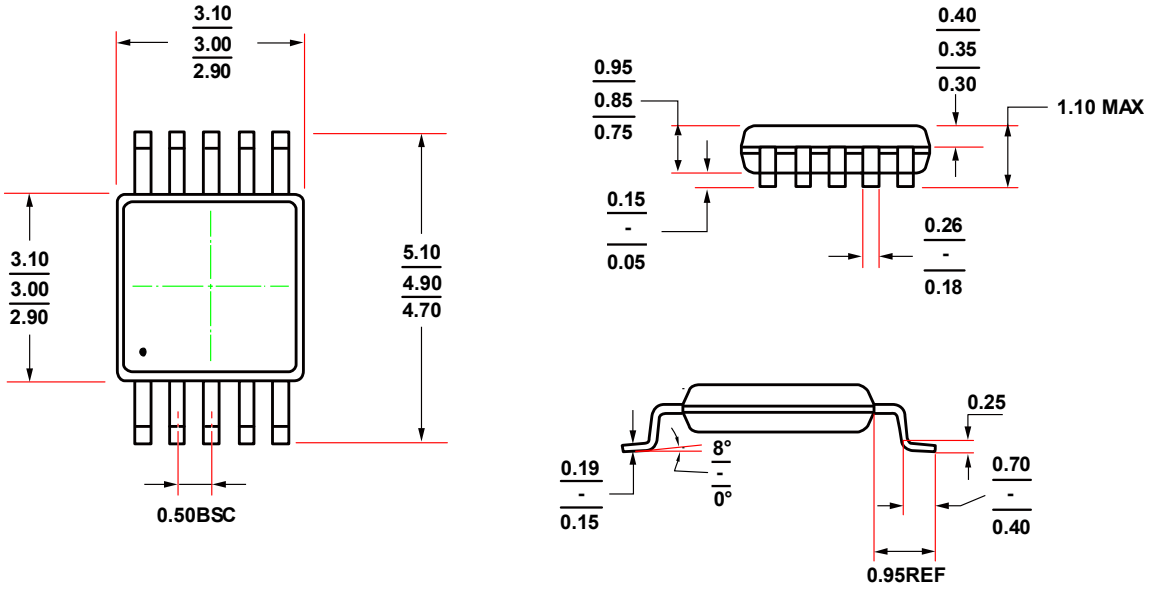


Figure 49. 10-Lead MSOP Package Dimensions shown in millimeter

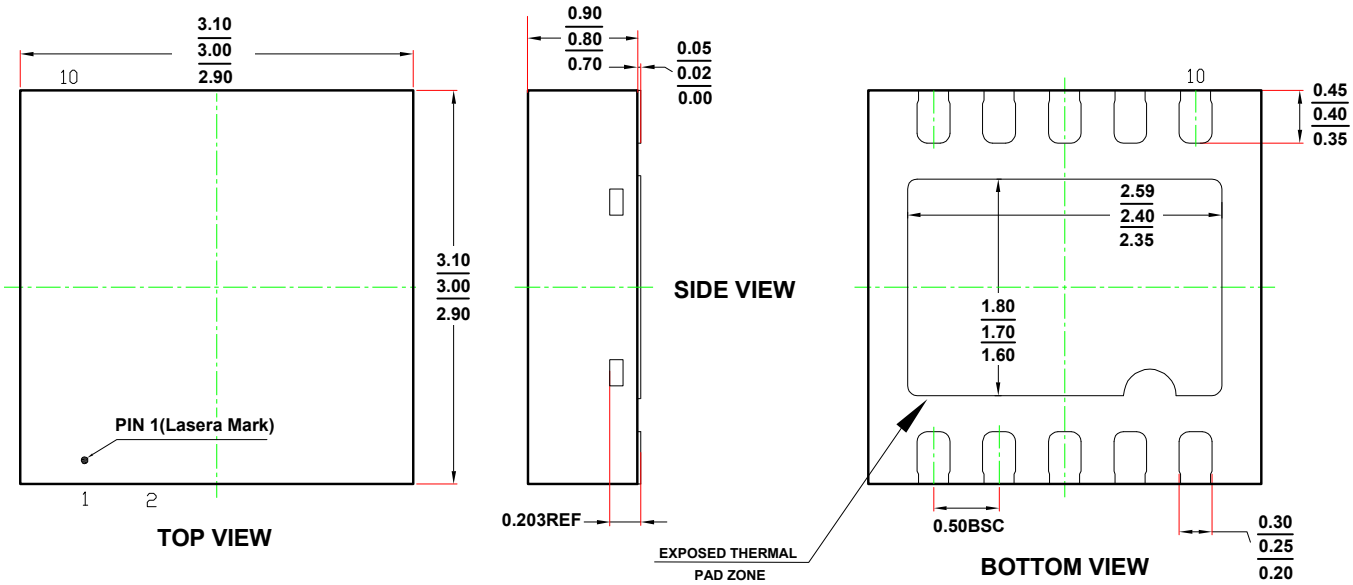


Figure 50. 10-Lead DFN Package Dimensions shown in millimeter


ZJW Microelectronics Ltd. All rights reserved

## Ordering Guide

| Model | Orderable Device | Status [1] | Resolution (bit) | Supply Voltage (V) | Temperature Range (°C) | Package | External Package |
|---|---|---|---|---|---|---|---|
| ZJC2004 | ZJC2004AUBET | ACTIVE | 18 | 4.75 to 5.25 | -40 to +85 | MSOP-10 | Tube |
| | ZJC2004AUBER | ACTIVE | | | | MSOP-10 | 13” Reel |
| | ZJC2004ATBER | ACTIVE | | | | DFN-10 | 13” Reel |

## Product Order Model

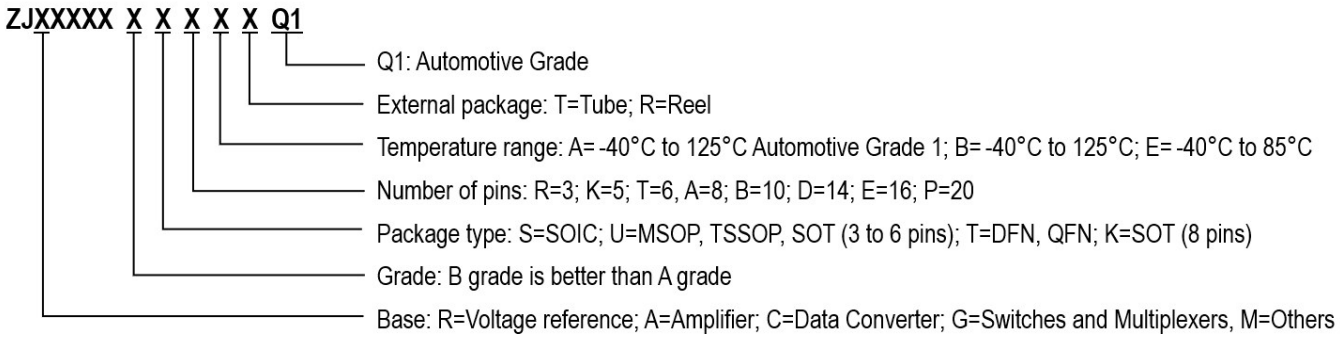


[1] The marketing status values are defined as follows:
**ACTIVE:** Product device recommended for new designs.
**LIFEBUY:** ZJW has announced that the device will be discontinued, and a lifetime-buy period is in effect.
NRND: Not recommended for new designs. Device is in production to support existing customers, but ZJW does not recommend using this part in a new design.
**PREVIEW:** Device has been announced but is not in production. Samples may be available.
**OBSOLETE:** ZJW has discontinued the production of the device.


ZJW Microelectronics Ltd. All rights reserved

## Related Parts

| Part Number | Description | Comments |
|---|---|---|
| **ADC** | | |
| ZJC2020 | 20-bit 350 kSPS SAR ADC | Fully differential input, SINAD 101.4 dB, THD -118 dB |
| ZJC2000/2010 | 18-bit 400 kSPS/200 kSPS SAR ADC | Fully differential input, SINAD 99.3 dB, THD -113 dB |
| ZJC2001/2011 | 16-bit 500 kSPS/250 kSPS SAR ADC | Fully differential input, SINAD 95.3 dB, THD -113 dB |
| ZJC2002/2012<br>ZJC2003/2013 | 16-bit 500 kSPS/250 kSPS SAR ADC | Pseudo-differential unipolar input, SINAD 91.7 dB, THD -105 dB<br>Pseudo-differential bipolar input, SINAD 91.7 dB, THD -105 dB |
| ZJC2004/2014<br>ZJC2005/2015 | 18-bit 400 kSPS/200 kSPS SAR ADC | Pseudo-differential unipolar input, SINAD 94.2 dB, THD -105 dB<br>Pseudo-differential bipolar input, SINAD 94.2 dB, THD -105 dB |
| ZJC2007/2017<br>ZJC2008/2018 | 14-bit 600 kSPS/300 kSPS SAR ADC | Pseudo-differential unipolar input, SINAD 85 dB, THD -105 dB<br>Pseudo-differential bipolar input, SINAD 85 dB, THD -105 dB |
| ZJC2009 | Small size, 12-bit 1 MSPS SAR ADC | Single-ended input, SOT23-6, 2.3 V to 5 V, SINAD 73 dB, THD -89 dB |
| ZJC2100/1-18<br>ZJC2100/1-16 | 18-bit 400 kSPS/200 kSPS 4-ch differential SAR ADC, SINAD 99.3 dB, THD -113 dB<br>16-bit 500 kSPS/250 kSPS 4-ch differential SAR ADC, SINAD 95.3 dB, THD -113 dB | |
| ZJC2102/3-18<br>ZJC2102/3-16<br>ZJC2102/3-14 | 18-bit 400 kSPS/200 kSPS 8-ch pseudo-differential SAR ADC, SINAD 94.2 dB, THD -105 dB<br>16-bit 500 kSPS/250 kSPS 8-ch pseudo-differential SAR ADC, SINAD 91.7 dB, THD -105 dB<br>14-bit 600 kSPS/300 kSPS 8-ch pseudo-differential SAR ADC, SINAD 85 dB, THD -105 dB | |
| ZJC2104/5-18<br>ZJC2104/5-16 | 18-bit 400 kSPS/200 kSPS 4-ch pseudo-differential SAR ADC, SINAD 94.2 dB, THD -105 dB<br>16-bit 500 kSPS/250 kSPS 4-ch pseudo-differential SAR ADC, SINAD 91.7 dB, THD -105 dB | |
| **DAC** | | |
| ZJC2541-18/16/14<br>ZJC2543-18/16/14 | 18/16/14-bit 1 MSPS single channel DAC with unipolar output | Power on reset to 0 V (ZJC2541) or $V_{REF}$/2 (ZJC2543), 1 nV-S glitch, SOIC-8, MSOP-10/8, DFN-10 packages |
| ZJC2542-18/16/14<br>ZJC2544-18/16/14 | 18/16/14-bit 1 MSPS single channel DAC with bipolar output | Power on reset to 0 V (ZJC2542) or $V_{REF}$/2 (ZJC2544), 1 nV-S glitch, SOIC-14, TSSOP-16, QFN 16 packages |
| **Amplifier** | | |
| ZJA3000-1/2/4<br>ZJA3001-1/2/4 | Single/Dual/Quad 36 V low bias current precision Op Amps | 3 MHz, 35 µV max Vos, 0.5 µV/°C max TCVos, 25 pA max Ibias, 1 mA/ch, input to V- (ZJA3000 only), RRO, 4.5 V to 36 V |
| ZJA3018-2<br>ZJA3008-2 | OVP ±75 V, 36 V, Low Power, High Precision Op Amp<br>36 V, Low Power, High Precision Op Amp | 1.3 MHz, 10 µV max Vos, 0.5 µV/°C max TCVos, 25 pA max Ibias, 0.5 mA/ch, OVP ±75 V (ZJA3018 only), RRO, 4.5 V to 36 V |
| ZJA3512-2 | Dual 36 V 7 MHz precision JFET Op Amps | 7 MHz, 35 V/µS, 50 µV max Vos, 1 µV/°C max TCVos, 2 mA/ch, RRO, 9 V to 36 V |
| ZJA3206/06/02-1/2 | Precision 24/11.6/5.3 MHz CMOS RRIO Op Amps | 24/11.6/5.3 MHz, RRIO, 30 µV max Vos, 1 µV/°C max TCVos, 0.6 pA Ib, 2.7 V to 5.5 V |
| ZJA3600/1 | 36 V ultra-high precision in-amp | CMRR 105 dB min (G = 1), 25 pA max Ib, 25 µV max Vosi, ±2.4 V to ±18 V, -40 °C to 125 °C |
| ZJA3611, ZJA3609 | 36 V precision wider bandwidth precision in-amp (G ≥ 10) | CMRR 120 dB min (G = 10), 25 pA max Ibias, 25 µV max Vosi, 1.2 MHz BW (G = 10) |
| ZJA3676/7<br>ZJA3678/9 | Low power, G = 1 Single/Dual 36 V difference amplifier<br>Low power, G = 0.5/2 Single/Dual 36 V difference amplifier | Input protection to ±65 V, CMRR 104 dB min (G = 1), Vos 100 µV max, gain error 15 ppm max, 500 kHz BW (G = 1), 330 µA/channel, 2.7 V to 36 V |
| ZJA3669 | High Common-Mode Voltage Difference Amplifier | ±270 V CMV, 2.5 kV ESD, 96 dB min CMRR, 450 kHz BW, 4 V to 36 V, SOIC-8 |
| ZJA3100 | 15 V precision fully differential amplifier | 145 MHz, 447 V/µS, 50 nS to 16-bit, 50 µV max Vos, 4.6 mA Iq, SOIC/MSOP-8, QFN-16 |
| ZJA3236/26/22-2 | Low-cost 22/10/5 MHz CMOS RRIO Op Amps | 22/11/5 MHz, RRIO, 2 mV max Vos, 6 µV/°C max TCVos, 0.6 pA Ib, 2.7 V to 5.5 V |
| ZJA3622/8 | 36 V low-cost precision in-amp | 0.5 nA max Ibias, 125 µV max Vosi, 625 kHz BW (G = 10), 3.3 mA Iq, ±2.4 V to ±18 V |
| **Voltage Reference** | | |
| ZJR1004 | 40 V supply precision voltage reference | $V_{OUT}$ = 2.048/2.5/3/3.3/4.096/5/10 V, 5 ppm/°C max drift -40 °C to 125 °C |
| ZJR1001/2<br>ZJR1003 | 5.5 V low power voltage reference<br>(ZJR1001 with noise filter option) | $V_{OUT}$ = 2.048/2.5/3/3.3/4.096/5 V, 5 ppm/°C max drift -40 °C to 125 °C, ±0.05% initial error, 130 µA, ZJR1001/2 in SOT23-6, ZJR1003 in SOIC/MSOP-8 |
| ZJR1302 | 5.5 V low power compact precision voltage reference | $V_{OUT}$ = 2.048/2.5/3/3.3/4.096 V, 30 ppm/°C max drift -40 °C to 125 °C, 130 µA, SOT23-3 |
| **Switches and Multiplexers** | | |
| ZJG4438/4439 | 36 V fault protection 8:1/dual 4:1 multiplexer | Protectionto ±50 V power on & off, latch-up immune, Ron 270 Ω, 14.8 pC, $t_{ON}$ 166 nS |
| ZJG4428/4429 | 36 V 8:1/dual 4:1 multiplexer | Latch-up immune, Ron 270 Ω, 14.8 pC charge injection, $t_{ON}$ 166 nS |
| **Quad Matching Resistor** | | |
| ZJM5400 | ±75 V precision match resistors | Mismatch < 100 ppm, 10k:10k:10k:10k, 100k:100k:100k:100k, 100k:10k:10k:100k, 1k:1k:1k:1k, 1M:1M:1M:1M, 5k:1k:1k:5k, 5k:1.25k:1.25k:5k, 9k:1k:1k:9k, ESD: 3.5 kV |


ZJW Microelectronics Ltd. All rights reserved